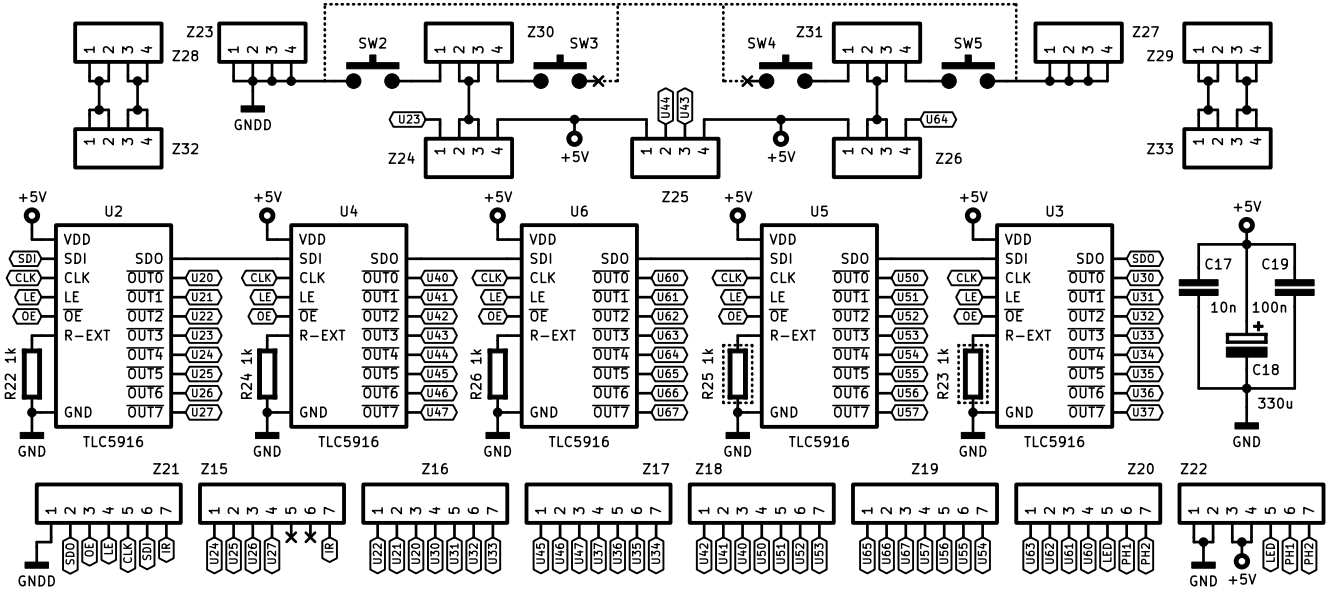

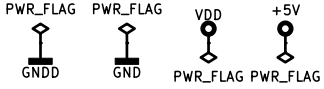

Sheet: /
File: DriverBoard.sch

Title: MatrixDisplay 3/5 (DriverBoard)

Size: A4	Date: 2017-06-28	**Rev: 1.1**
KiCad E.D.A. kicad 4.0.5		Id: 1/1